# MODEL V4A - PMB

## DIRECT COUPLED

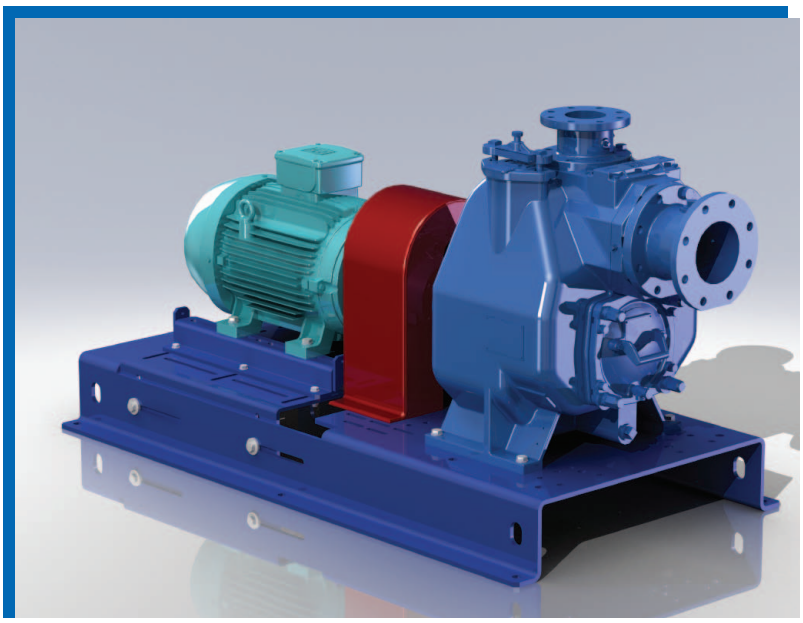

## MODEL V4A - PMB

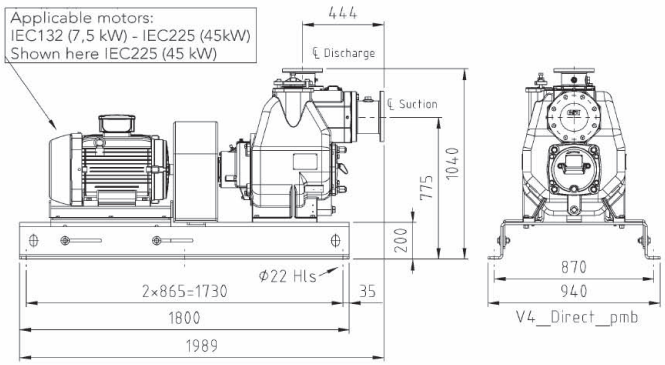


**Optional Equipment:** CD4MCu Stainless Steel/G-R Hard Iron Impeller and Wear Plate. Pump Drain Kit, High PumpTemperature Shutdown Kit, 240V Casing Heater, Suction and Discharge Gauge Kit, Discharge Check Valve, Automatic Air Release Valve.

## PUMP SPECIFICATIONS

**Size:** 150 mm x 100 mm DIN 2527 (PN16) Flanged.

**Pump Casing:** Gray Iron 30. Maximum Operating Pressure 8,14 Bar.*

**Semi-Open Type, Two Vane Impeller:** Ductile Iron 65-45-12. Handles 76,2 mm Diameter Spherical Solids.

**Impeller Shaft:** Alloy Steel 4150.

**Self-Cleaning Replaceable Wear Plate:** Carbon Steel 1015.

**Shimless Adjustable Cover Plate:** Gray Iron 30.

**Externally Removable Flap Valve:** Neoprene w/ Nylon and Steel Reinforcing.

**Suction Flange/Flap Valve Seat:** Gray Iron 30.

**Bearing Housing:** Gray Iron 30.

**Seal Plate:** Gray Iron 30.

**Shaft Sleeve:** Alloy Steel 4130.

**Seal:** Cartridge Type, Mechanical, Oil-Lubricated, Double Floating, Self-Aligning. Silicon Carbide Rotating and Stationary Faces. Stainless Steel 316 Stationary Seat. Fluorocarbon Elastomers (DuPont Viton® or Equivalent). Stainless Steel 18-8 Cage and Spring. Maximum Temperature of Liquid Pumped, 71°C.*

**Radial Bearing:** Open Single Row Ball.

**Thrust Bearing:** Open Double Row Ball.

**Bearing and Seal Cavity Lubrication:** SAE 30 Non-Detergent Oil.

**Gaskets:** Buna-N, Compressed Synthetic Fibers, Vegetable Fiber, PTFE, Cork, and Rubber.

**O-Rings:** Buna-N.

**Hardware:** Standard Plated Steel. Brass Pressure Relief Valve. Bearing and Seal Cavity Oil Level Sight Gauges.

**Flange kit:** 6" x 4" Metric suct/discharge spoolkit 48213-127

* Consult Gorman-Rupp Europe for applications exceeding maximum pressure and/or temperature indicated.

** Refer to The Gorman-Rupp Specification sheet for details on the available pumps. Premium materials subject to a price adder.

Specifications and illustrations are subject to change without notice / © Copyright by Gorman-Rupp Europe 2015.

GORMAN-RUPP EUROPE
gresales@gormanruppeurope.com

GORMAN-RUPP PUMPS

## PERFORMANCE CURVE

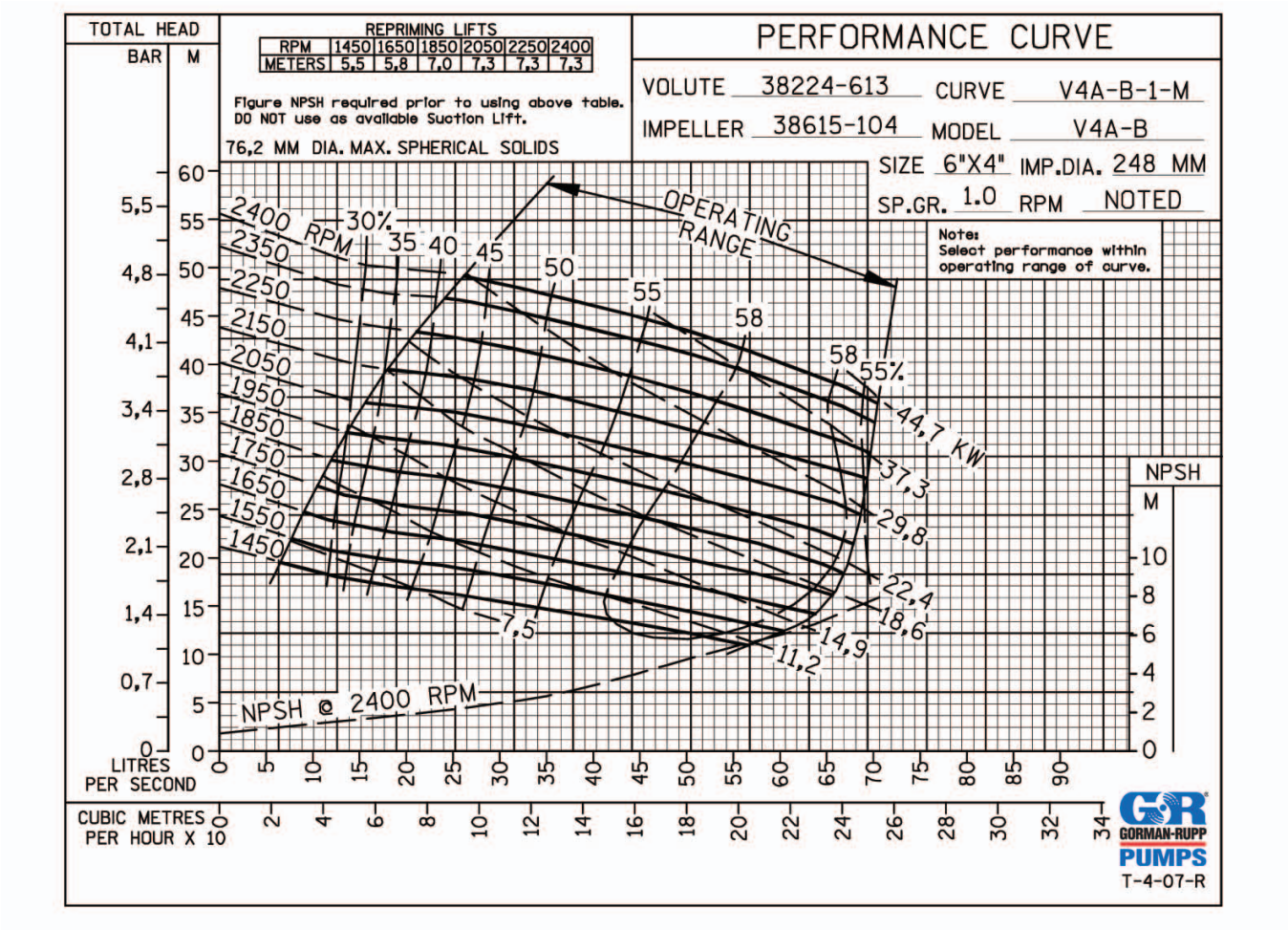


## MOTOR DIMENSIONS

| W22 - PREMIUM EFFICIENCY | | | |
|---|---|---|---|
| pole | IV | 1500rpm | 50Hz |
| voltage | 380V | 400V | 415V |

| output (kw) | dimensions w x l x h (mm) | weight (kg) | frame |
|---|---|---|---|
| 45 | 455 x 886 x 609 | 420 | 225S/M |
| 37 | 455 x 886 x 609 | 392 | 225S/M |
| 30 | 402 x 767 x 517 | 243 | 200L |
| 22 | 360 x 702 x540 | 198 | 180L |
| 18,5 | 360 x 664 x 540 | 180 | 180M |
| 15 | 329 x 642 x 424 | 145 | 160L |
| 11 | 329 x 598 x 424 | 109 | 160M |
| 7,5 | 271 x 490 x 350 | 78 | 132M |

## UPDATED PMB FRAME

Steel: S235JRG2, powder coated finish.
Zinc plated hardware + nuts.

## MOTOR SPECIFICATIONS

### Standard Features

- Three-phase, multivoltage, IP55, TEFC;
- Premium efficiency - complying with IE3 efficiency levels according to IEC60034-30;
- Number of Poles: 4*
- Mounting: B3T;
- Voltage: 220-240/380-415V / 380-415/660V;
- Class "F" insulation (ΔT=80K);
- Continuous duty: S1;
- Design N;
- WISE® (WEG Insulation System Evolution) insulation system - Suitable for inverter duty applications*;
- Ambient temperature: 40°C, at 1000 m.a.s.l.;
- Squirrel cage rotor / Aluminium die cast;
- V'Ring seal for frames 63 to 200L;
- Stainless steel nameplate AISI 316;
- Metric threaded cable entries on the terminal box;
- Color: RAL 6002 - Green.

*For additional details about Inverter operation, please contact our technical support.

*Special Insulation for voltage above 575V

### Optional Available

- Degree of Protection: IP56, IP65, IP66, IPW56, IPW65 or IPW66

GORMAN-RUPP EUROPE
gresales@gormanruppeurope.com